ICM-20601 Product Brief

World's First Wide-Range 6-Axis MotionTracking Device for High Speed Applications

GENERAL DESCRIPTION

Many of today's wearable and sports solutions, which analyze the user's high speed motion, require higher full scale range (FSR) than currently available, to better ensure that critical data is not lost during high speed rotation. The ICM-20601 SoC offers the smallest size, lowest profile and lowest power in conjunction with industry leading high FSR.

With an extended FSR range of ±4000 dps for gyroscope and ±32g for accelerometer, the ICM-20601 enables precise motion tracking of high speed sports-related activity providing continuous sensor data throughout the motion, providing more accurate analysis.

The ICM-20601 is the world's first wide-range 6-axis MotionTracking device for sports and other high speed applications. It is available in a 3x3x0.75mm 16-pin LGA package.

ORDERING INFORMATION

PART	TEMP RANGE	PACKAGE
ICM-20601†	−40°C to +85°C	16-Pin LGA

†Denotes RoHS and Green-Compliant Package

BLOCK DIAGRAM

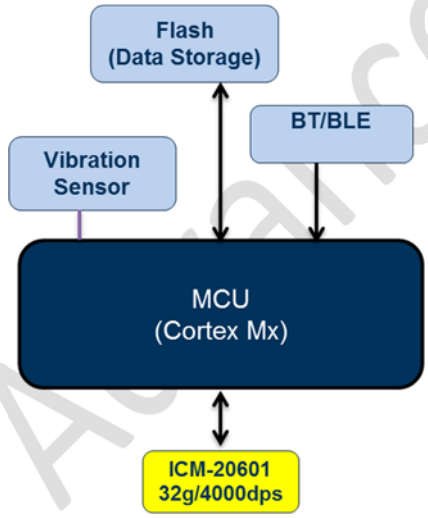

Motion Analysis Pod Architecture

APPLICATIONS

- Sports
- Wearable Sensors

FEATURES

- 3-Axis Gyroscope with Programmable FSR of ±500dps, ±100dps, ±2000dps and ±4000dps
- 3-Axis Accelerometer with Programmable FSR of ±4g, ±8g, ±16g and ±32g
- User-programmable interrupts
- Wake-on-motion interrupt for low power operation of applications processor
- 512 byte FIFO buffer enables the applications processor to read the data in bursts
- On-Chip 16-bit ADCs and Programmable Filters
- Host interface: 8 MHz SPI or 400 kHz Fast Mode I^2C
- Digital-output temperature sensor
- VDD operating range of 1.71 V to 3.45V
- MEMS structure hermetically sealed and bonded at wafer level
- RoHS and Green compliant

TYPICAL OPERATING CIRCUIT

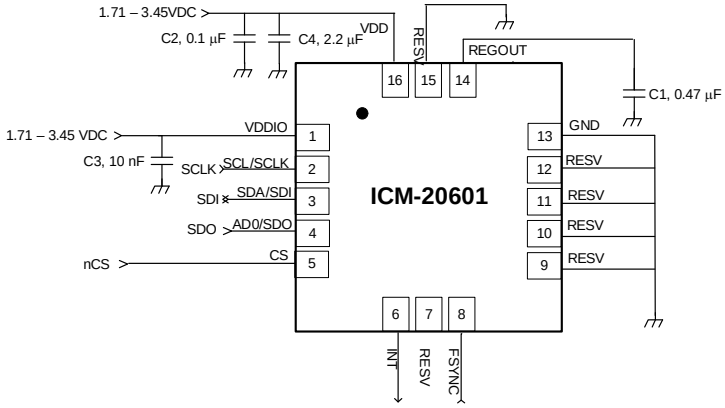

Advance Information